(Mitoitus)

Ovimagneetti Ner 5500LR RST

(Tilatiedolla, kosteuden kestävä)

Pitovoima	Max. 5500 N (1 kg = n. 10N) ei jälkimagnetismia.
Rakenne	Ruostumaton teräs, kosteuden kestävä.
Mitat	Magneetti 220x 65x 42mm Vastarauta 185x 61x 16mm
Syöttöjännite/ Virta	12VDC/ 460 mA (Punainen ja Keltainen +, Musta ja Ruskea -) 24VDC/ 220 mA. (Punainen +, Musta - , HUOM! Keltainen ja Ruskea kytketään yhteen.)
Rele ulostulo	Potentiaalivapaa kosketin 0,25A/ 30 VDC.
Ulostulo johtimet (NO/COM-kytkentä)	Valkoinen ja Vihreä kytkeytynyt, lukitus kiinni. Vastaraudan tunnistus perustuu Hall-ilmiöön, josta saadaan tilatieto esim. valvomoon.
HUOM!!!	Ohjaus ja hätäavaus (+) johtimen kautta !!!

Magneetti

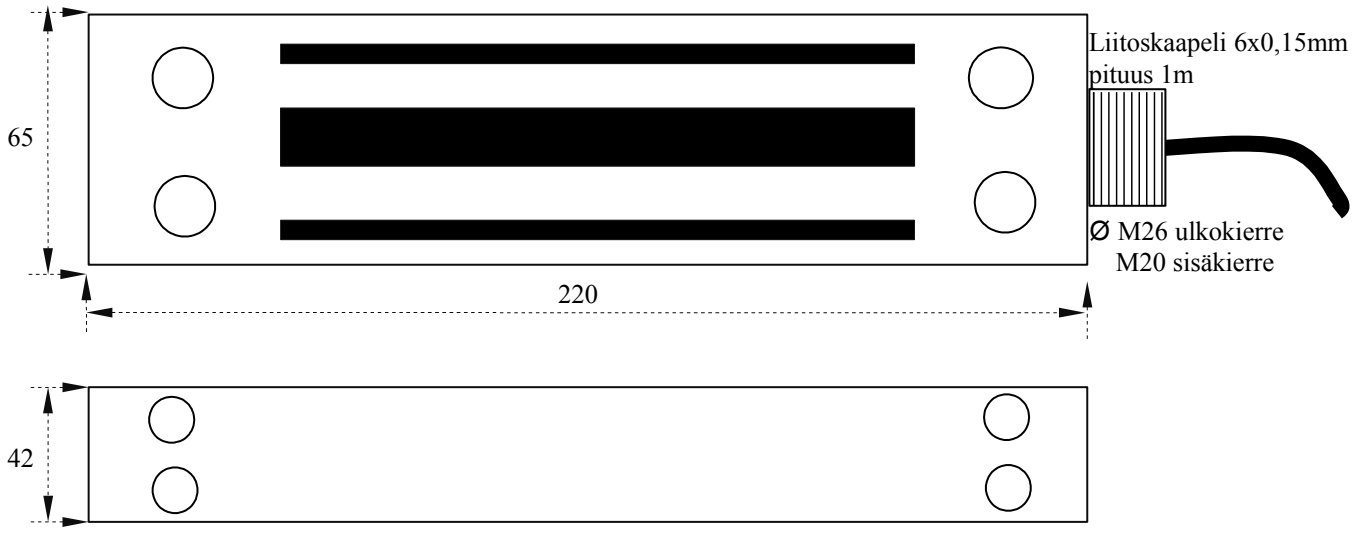

Vastarauta

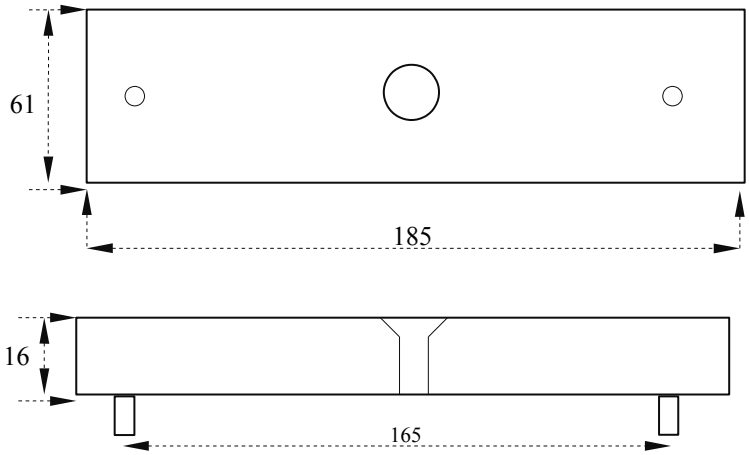

Kytkentä

12VDC

Valkoinen	COM
Vihreä	NO
Punainen	+12VDC
Keltainen	+12VDC
Ruskea	-0VDC
Musta	-0VDC

24VDC

Valkoinen	COM
Vihreä	NO
Punainen	+24VDC
Keltainen	Kytketään yhteen
Ruskea	
Musta	-0VDC

NERIVAL OY

Osoite Address	Puhelin Telephone	E-mail	VAT-ID-number	Pankit Banks
PL 31	+358-9-813 4571	sales@nerival.fi	FI 09098083	Nordea
FI-02361 ESPOO	Telefax	Internet	Kr nro	Danske Bank
FINLAND	+358-9-802 1386	http:// www.nerival.fi	561.602	Alv. rek

ASENNUKSEN PERIAATEKAAVIO

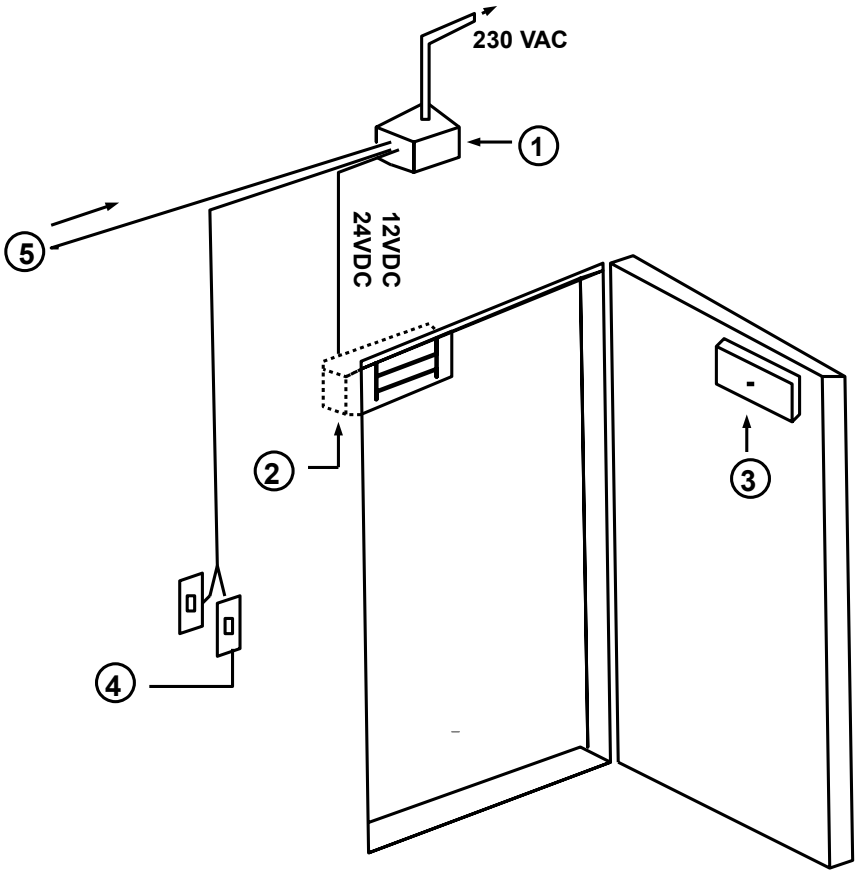

1. Jännitelähde
2. Magneettilukko
3. Vastarauta
4. Ovikohtainen aukaisupainike, kortinlukija tms.
5. Keskitetty ovenohjaus esim. valvomosta

VASTARAUDAN ASENNUSOHJE

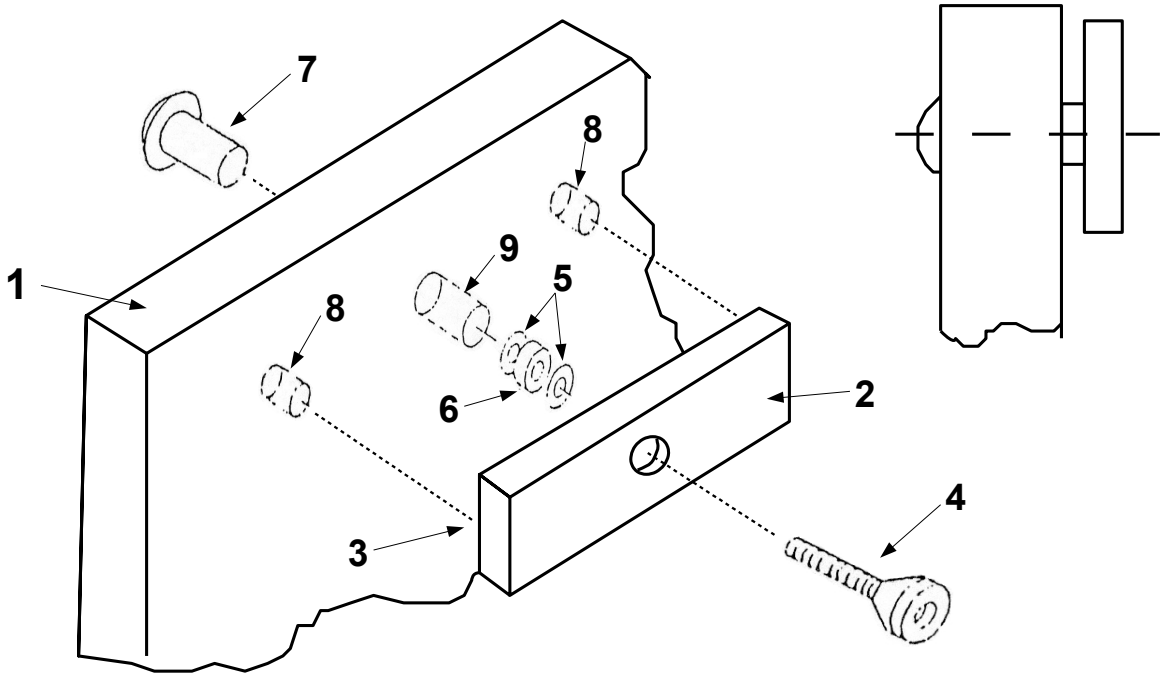

1. Ovi
2. Vastarauta
3. Vastaraudan ohjaustapit
4. M8 pultti kumilla
5. Aluslevyt
6. Kumiholkki
7. Mutteri holkilla
8. Reikä ohjaustapeille ø6mm
9. Reikä oviholkille ø12mm

HUOM! Vastaraudan asennus vaihtoehtoisesti metalliprofiiliin esim. niittimutteri M8 avulla.

ELECTROMAGNETIC GATE LOCK INSTALLATION INSTRUCTIONS

"Model:

Ner 5500LR RST

"Feature:

- Threaded conduit fitting
- Stainless Steel Case
- Built-in lock status sensor
- Suitable for outdoor
- Water Proof

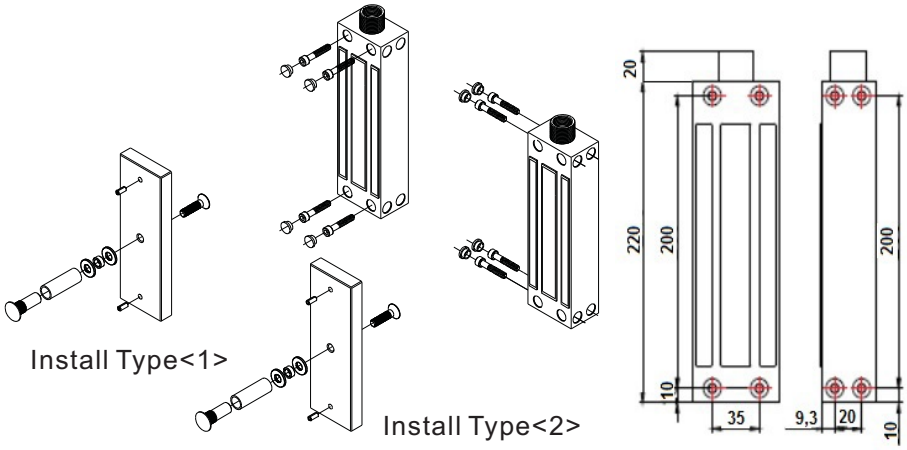

"Specifications:

		Note
Power supply	DC-12VDC / DC-24V	Switchable
Operation current	460mA/12VDC 220mA/24VDC	
Lock Status sensor	N.C. Output (0.25A/30VDC)	Reed switch
Holding force	1200lbs(544kg)	
Operation temperature	-20°C ~ 70°C	
Warranty	1 year	
Weight	4.9kg	
Sealing protection	IP67	
Body Dimensions	220 L X 63.5 W X 43 D (mm)	
Armatures Dimension	185 L X 61 W X 16 D (mm)	
Casing	Stainless Steel	

Please read before installing

Specific mounting brackets may be necessary to fit different types of gate.

Accessories diagram:

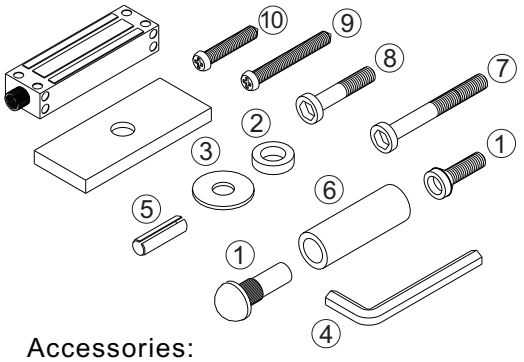

Accessories:

Type / Quantity	Model / Type		
1	Sexnut Bolt	1	
2	Rubber Washer	2	
3	Washer	2	
4	Allenkey	1	
5	Guide pins	2	
6	Door spacer	1	
7	Mounting screw	4	6x60mm
8	Mounting screw	4	6x40mm
9	Mounting screw	4	6x60mm
10	Mounting screw	4	6x50mm

"Installation

A. Determine the type of gate (refer to fig1 & fig2 & fig3)
Please make sure type of gate to ensure the type of brackets required to install.

B. Prepare the gate post for mounting the gate lock and armature
Determine the desired location for mounting the gate lock and armature on the gate post.Make sure there is space for wiring.

C. Mount the lock body

D. Mount the armature
If you are mounting the armature directly to the gate. You can refer to fig5 for drilling the armature mounting screw hole.

E. Verify proper alignment
Close the gate and verify the lock face and armature are making full contact of the entire armature length. Adjustments may be needed.

F. Connect the wires
Refer to Connection Diagram and Monitor Output for wiring.

G. Test the unit.

H. Insert the tamper caps into the mounting screw access holes of the lock body.
This should be the last step of the installation,as once the tamper caps are in place, it is difficult to remove.

"Installation diagram

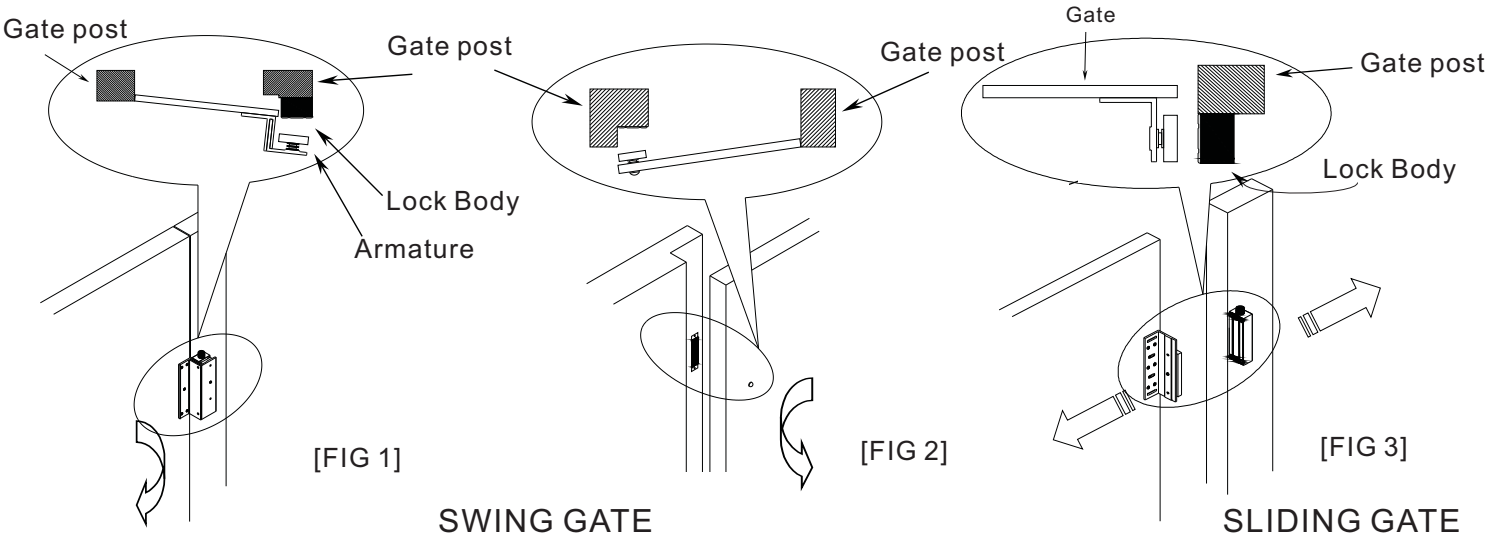

"Armature installations

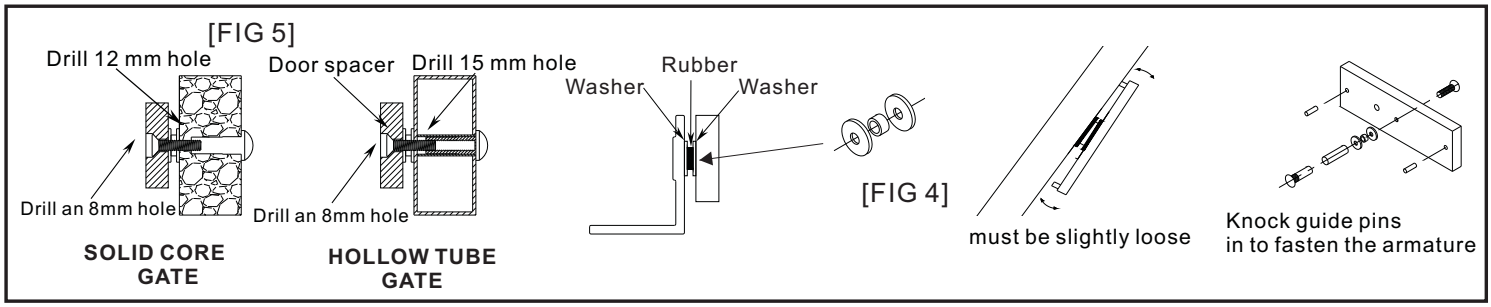

"Connection Diagram and Monitor Output

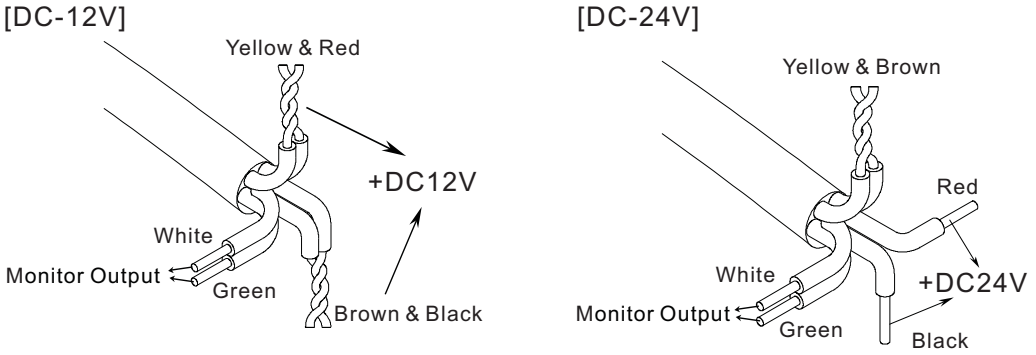

"Monitor Output

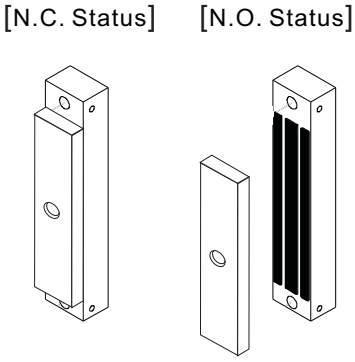

*Monitor output, contact rating (0.25A/30VDC)
*When magnetic lock and armature are engaged, the monitor output will change to N.C. status.

Problem:	Possible cause:	Solutions:
Door does not lock	No power	• Check the input voltage at the EM-lock.If the voltage is zero or a low reading , double check all wire connections.
	Incorrect wiring	• Refer to Connection Diagram and monitor output.
Low holding force	Lock body and armature plate did not contact properly.	• Make sure the lock body and armature plate are properly aligned. • Make sure the contact surfaces of the lock body and armature plate are clean and free from rust.
	Incorrect voltage setting	• Check the power adapter with a meter, and make sure the wiring is connected correctly (DC12V/24V).
	AC voltage supply	• EM-lock requires DC input voltage. When an AC transformer is used, a bridge rectifier must be installed to convert the AC output of the transformer to DC output.