NERIVAL

Poistumispainike PP-210

Jännite/virta:	max. 36VDC/3A
Mitat:	88 x 88 x 20mm
Rakenne:	Ruostumaton teräs
Kytkintoiminto:	Sulkeutuva (N/O)
Paino:	150g

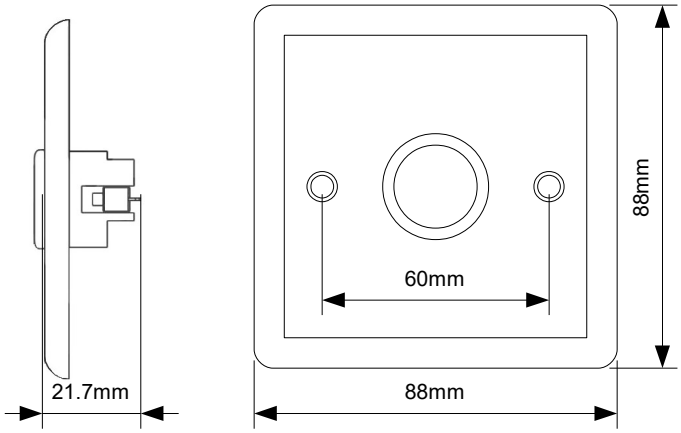

NERIVAL

Exit button PP-210
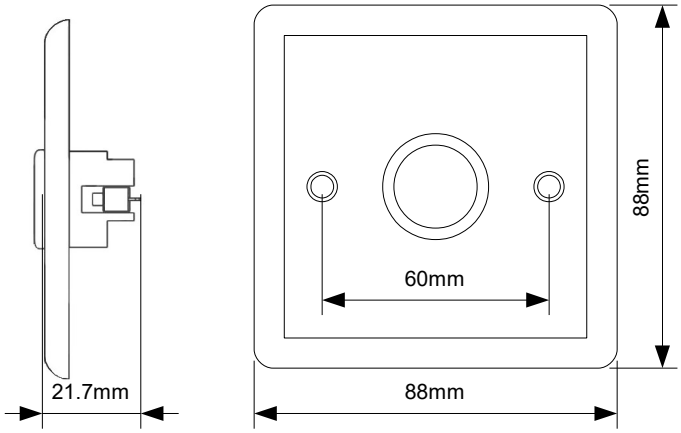
Voltage/current:	max. 36VDC/3A
Dimensions:	88 x 88 x 20mm
Structure:	Stainless steel
Contact function:	Normally open (N/O)
Weight:	150g